Bit Slice ALU Design

Add, Subtract, AND, OR

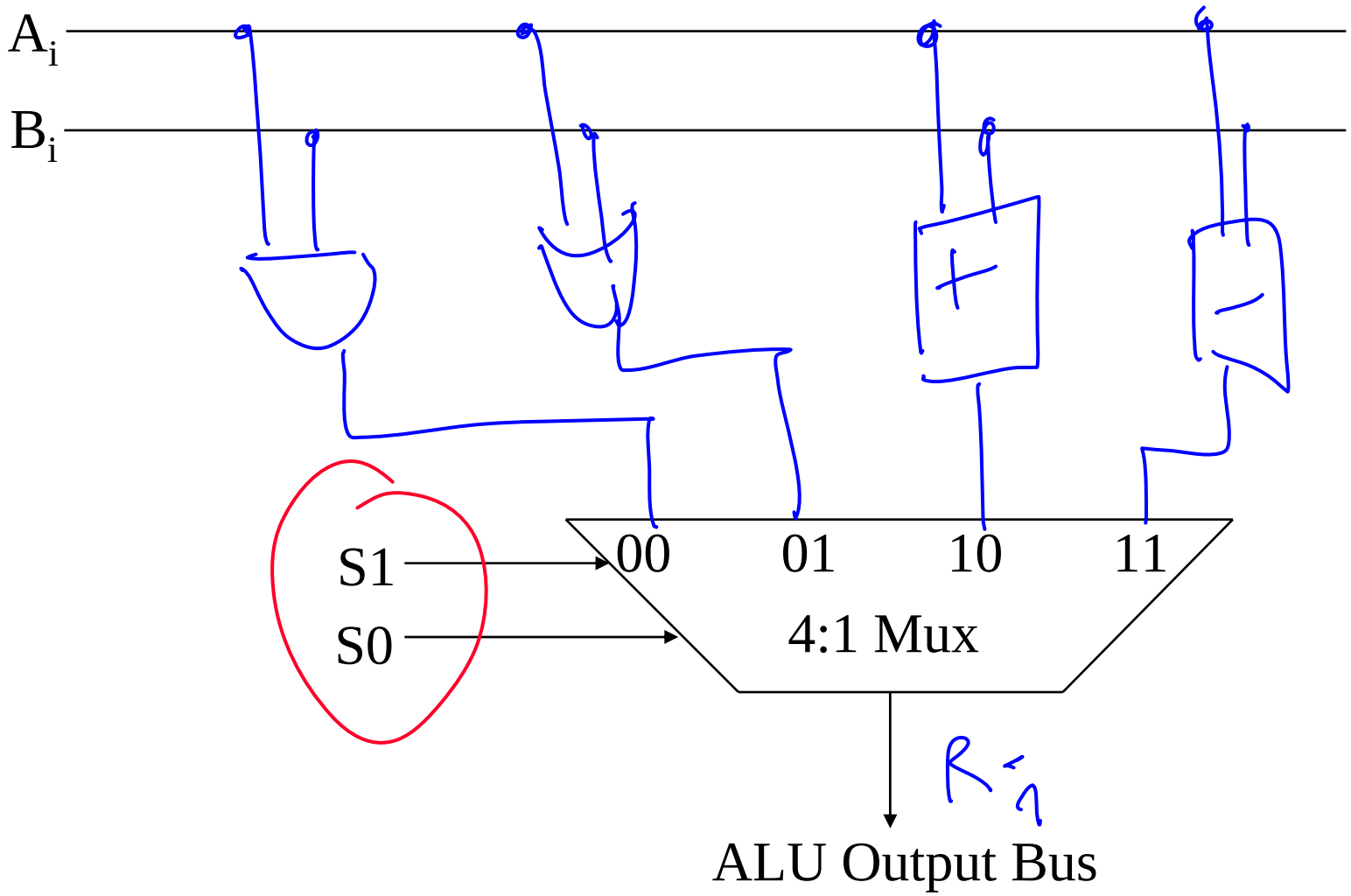

Bit Slice ALU Design (cont.)

Route Carries

Overflow, zero, negative

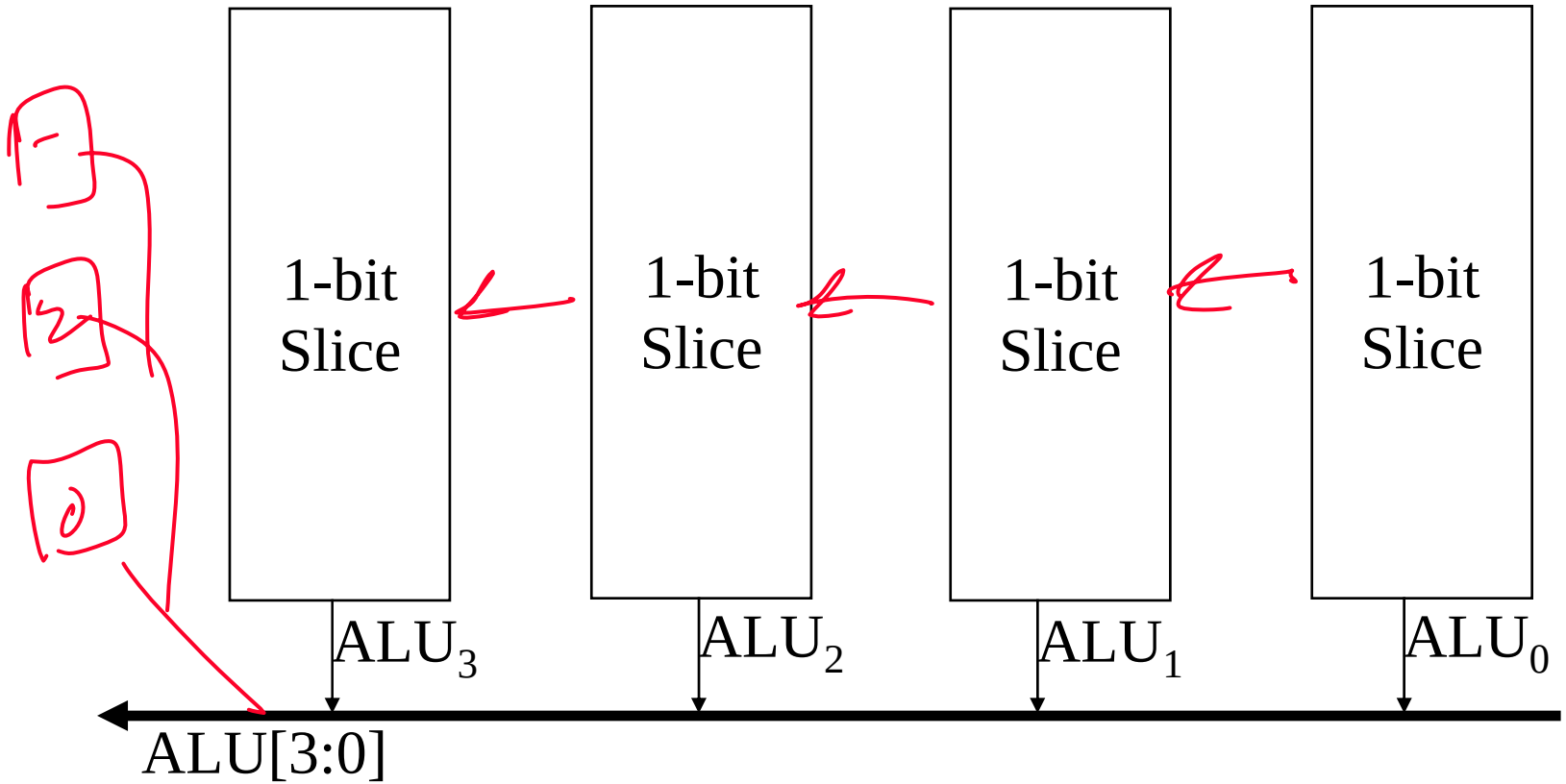

Shifter

Support shift operations: (A << 01101)

Optional shift by one: (A << b_0)

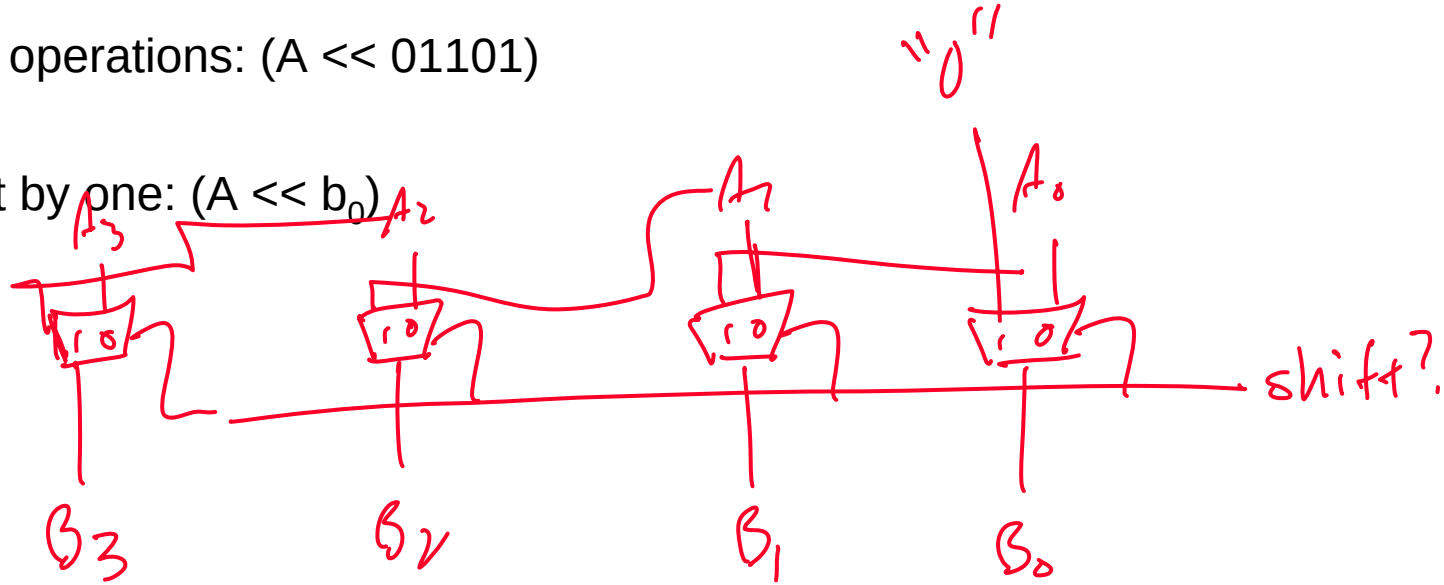

Optional shift by two: (A << b_1)

Shifter (cont.)

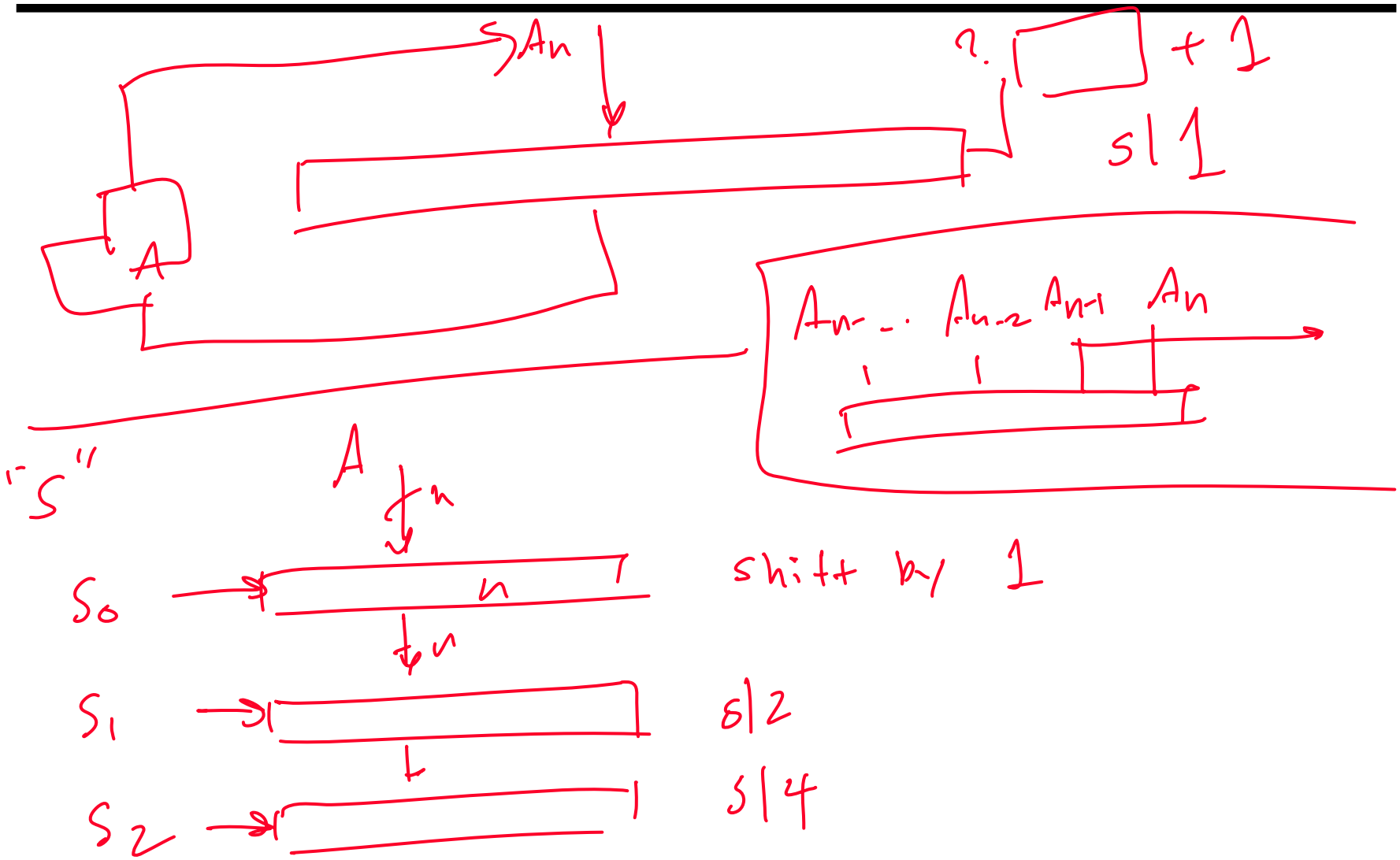

Multiplication

Example

Multiplicand:		**0**	**1**	**1**	**0**	**6**
Multiplier:		**0**	**1**	**0**	**1**	**5**
		0	1	1	0	
	0	0	0	0	0	**4 partial products**
0	1	1	0	0	0	
0 0	0	0	0	0	0	
						30

Repeat n times:

Compute partial product; shift; add

NOTE: Each bit of partial products is just an AND operation

Sequential Multipliers

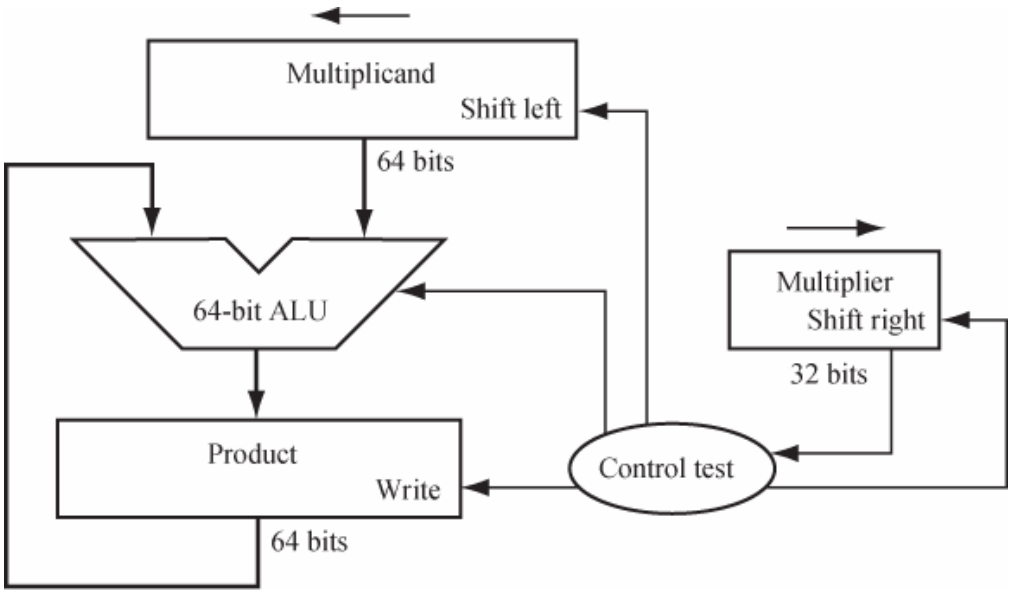

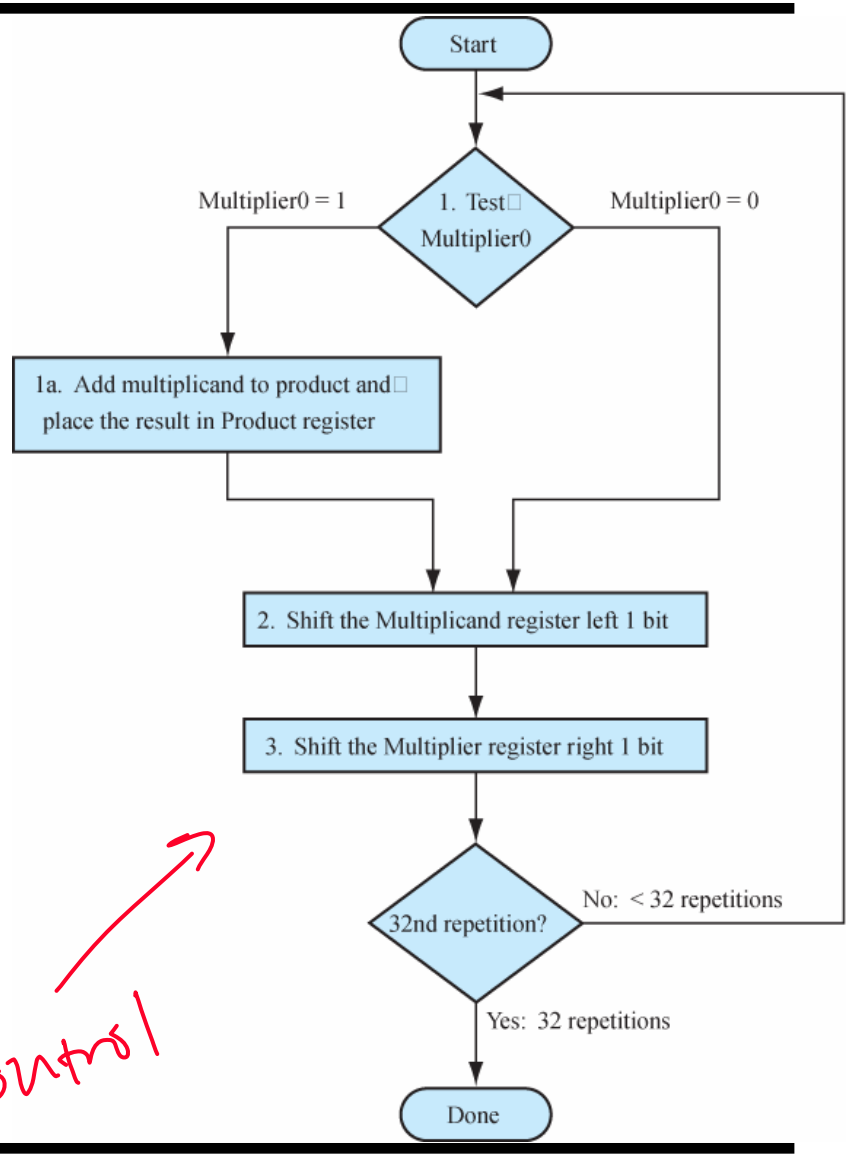

Datapath

Control

Division

Example

Divisor: 0010 (2) $\overline{}$ **0 1 1 0 (6) Dividend**

Sequential Dividers

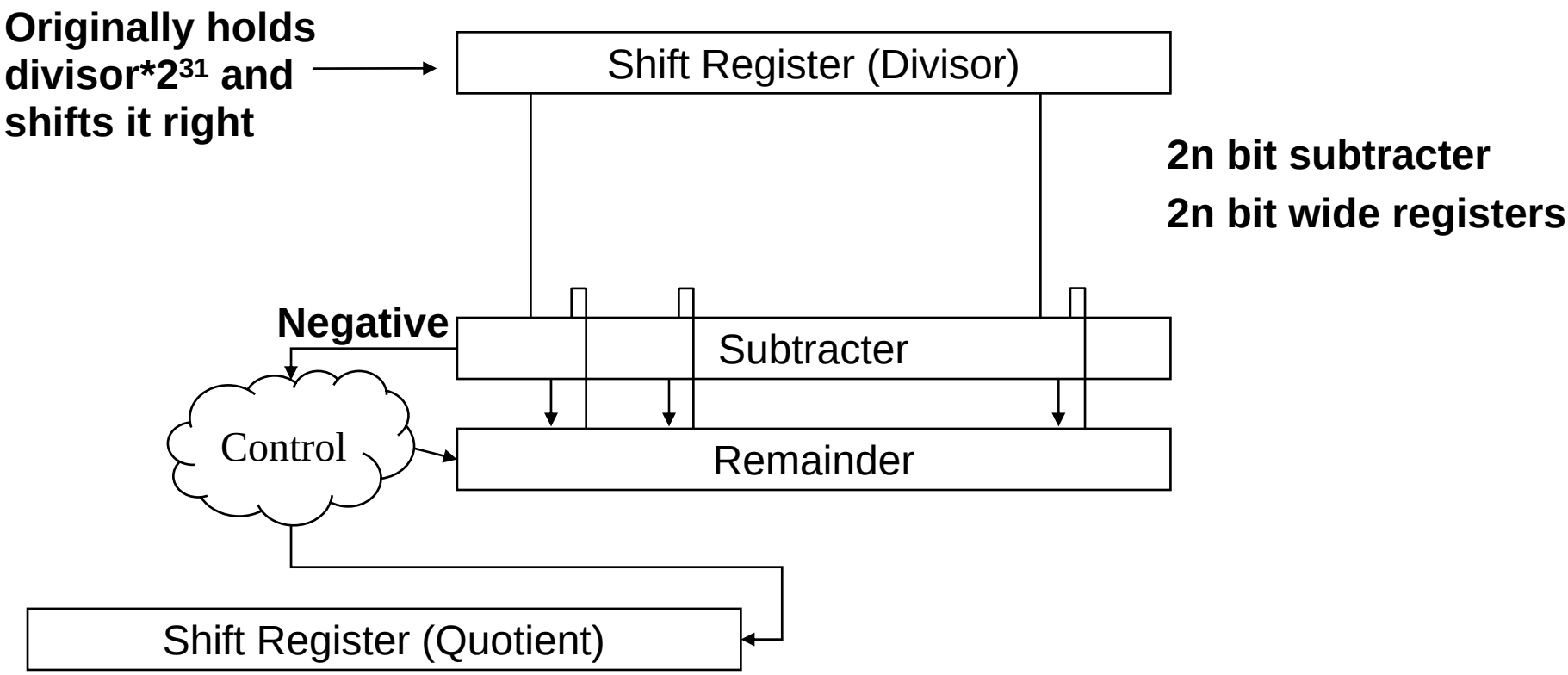

Remainder

Alternatively:

Shift remainder register to left

Use only n-bit subtracter

Floating Point

Want to represent numbers outside $2^{31}-1$ .. -2^{31}

Ideal: ~Scientific Notation

(+/-)Significand*Base^{Exponent} $5.439 * 10^{12}$ $1.010010 * 2^{100101}$

Multiplication:

$(5.1 * 10^{12}) * (-2.0 * 10^{-3})$

Sign: Different → negative (−)
Same → positive

Exponent: exp1 + exp2 (9)

Significand: 10.2 → 1.02

Sig1 x Sig2 left

if result >= base, div by base, exp++