Datapath & Control

Readings 5.1-5.4

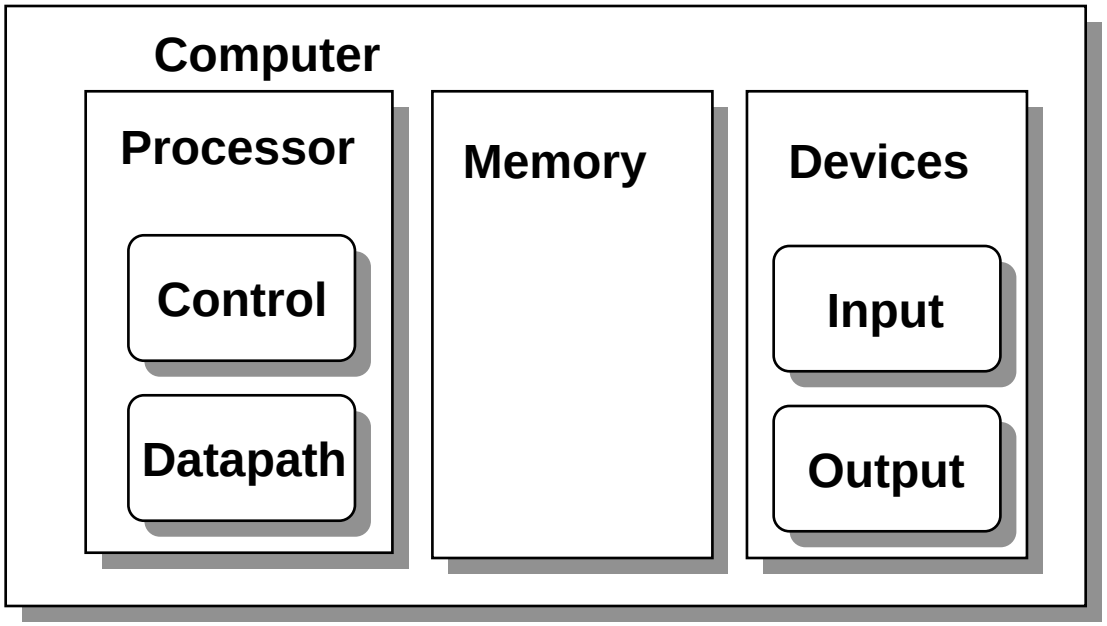

Datapath: System for performing operations on data, plus memory access.

Control: Control the datapath in response to instructions.

Simple CPU

Develop complete CPU for subset of instruction set

- Memory: `lw, sw`
- Branch: `beq`
- Arithmetic: `addi`

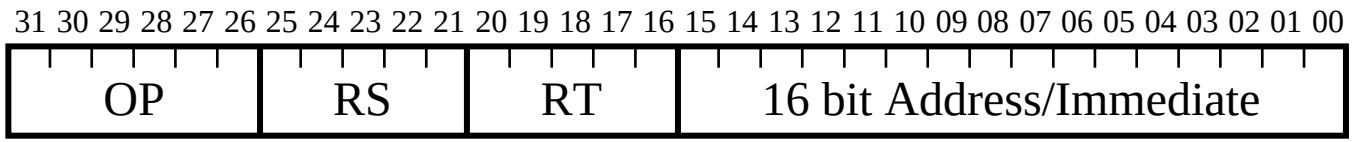

- Arithmetic: `add, sub`

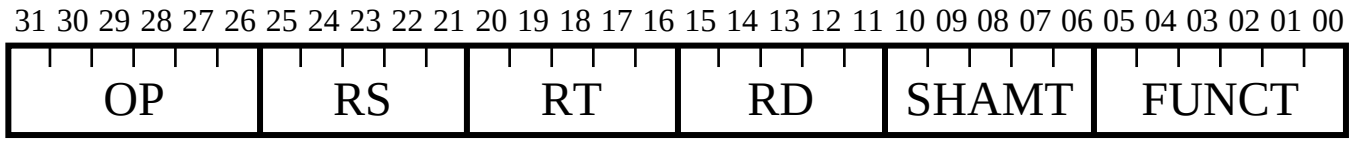

- Jump: `j`

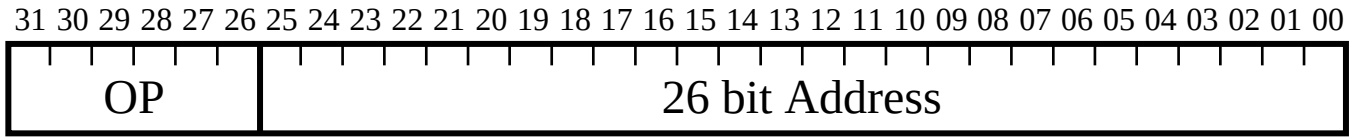

Most other instructions similar

Execution Cycle

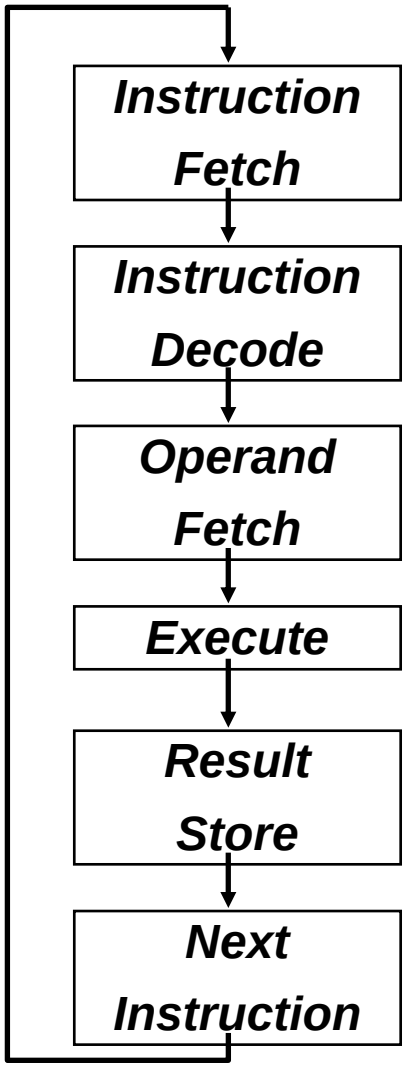

Obtain instruction from program storage

Determine required actions and instruction size

Locate and obtain operand data

Compute result value or status

Deposit results in storage for later use

Determine successor instruction

Processor Overview

Overall Dataflow

- PC fetches instructions
- Instructions select operand registers, ALU immediate values
- ALU computes values
- Load/Store addresses computed in ALU
- Result goes to register file or Data memory

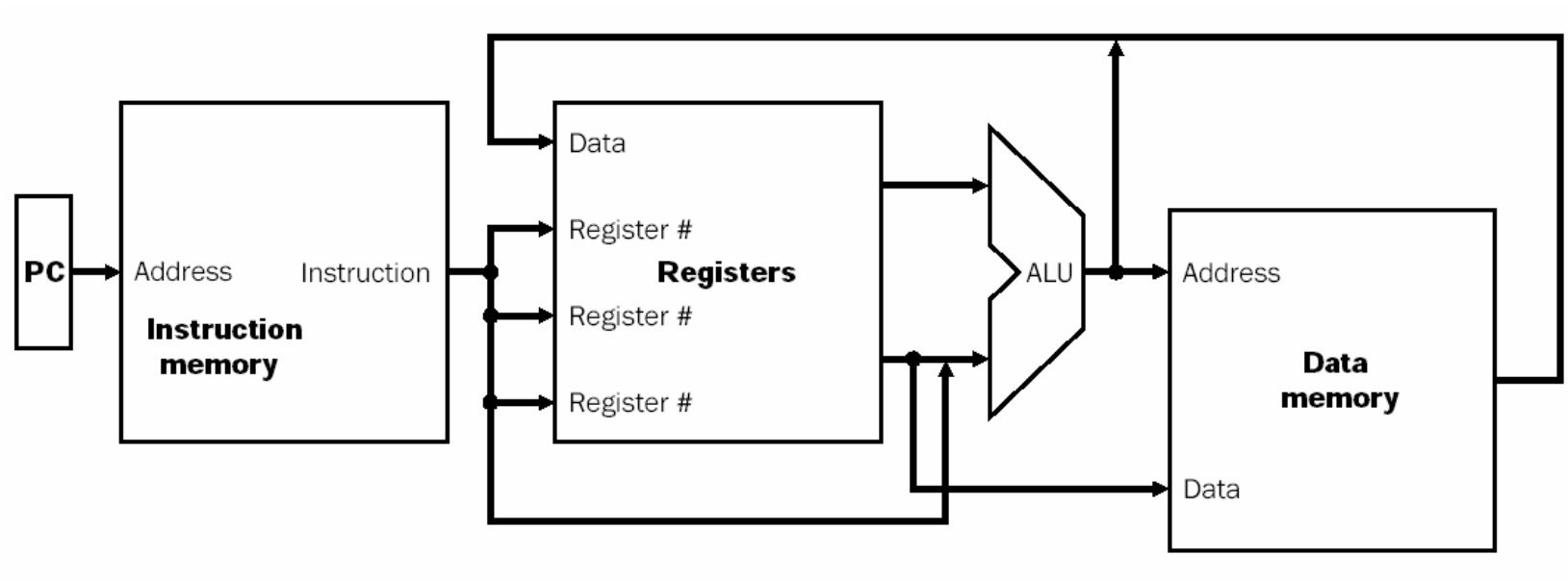

Processor Design

Convert instructions to Register Transfer Level (RTL) specification

```
Instruction = Memory[PC];
PC = PC + 4;
```

RTL specifies required interconnection of units

Control designed to achieve given paths for each instruction

Instruction Fetch UNIT

```
Instruction = Mem[PC];      // Fetch Instruction
PC = PC + 4;                // Increment PC (32bit)
```

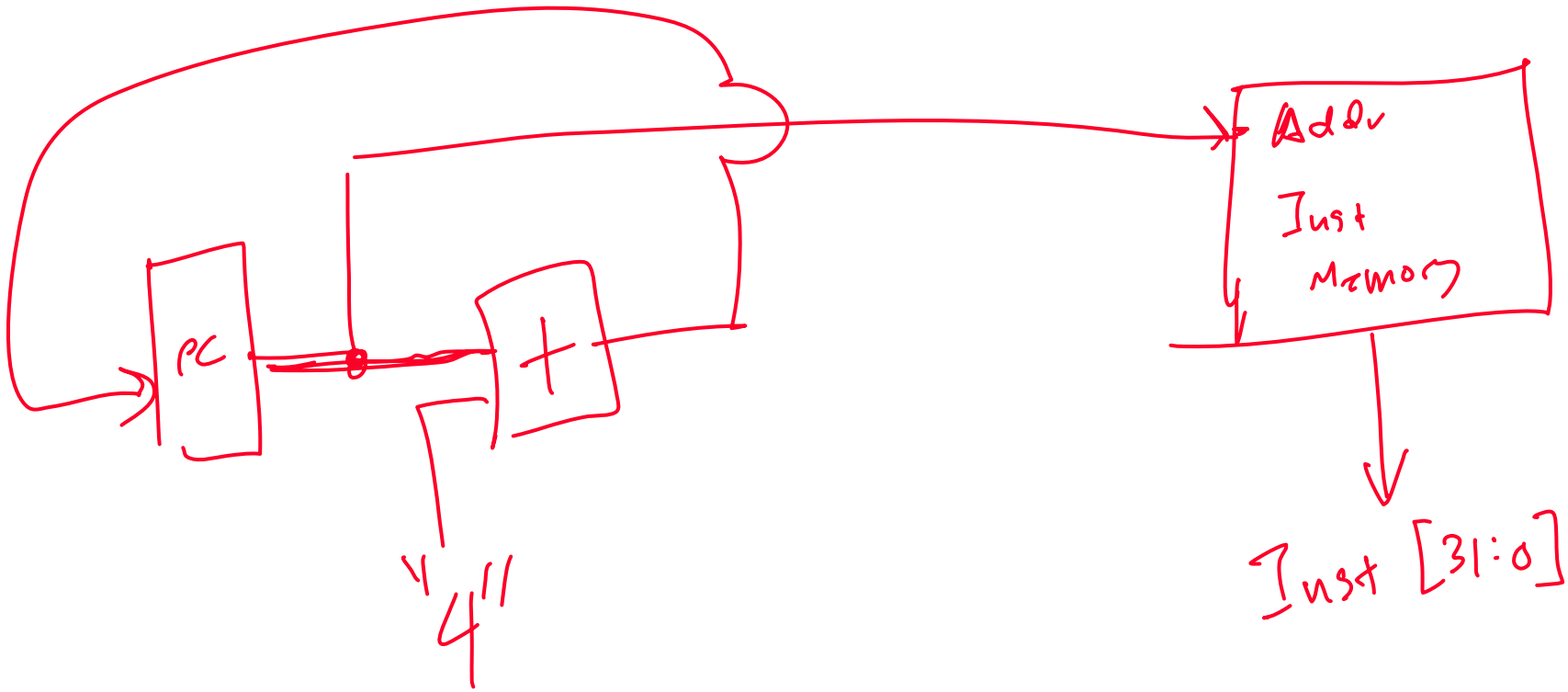

Add/Subtract RTL

Add instruction: `add rd, rs, rt`

```
Instruction = Mem[PC];
Reg[rd] = Reg[rs] + Reg[rt];
PC = PC + 4;
```

Inst Fetch

Subtract instruction: `sub rd, rs, rt`

```
Instruction = Mem[PC];
Reg[rd] = Reg[rs] - Reg[rt];
PC = PC + 4;
```

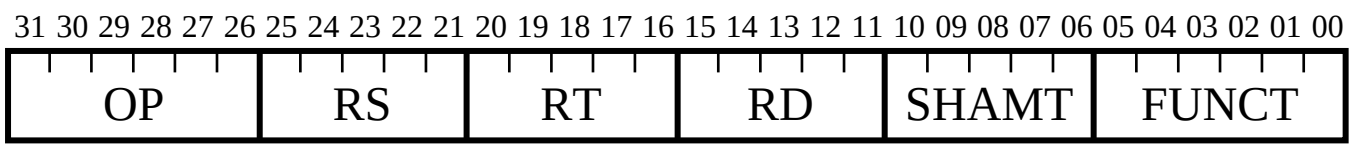

Datapath for Reg/Reg Ops

```
Reg[rd] = Reg[rs] op Reg[rt];
```

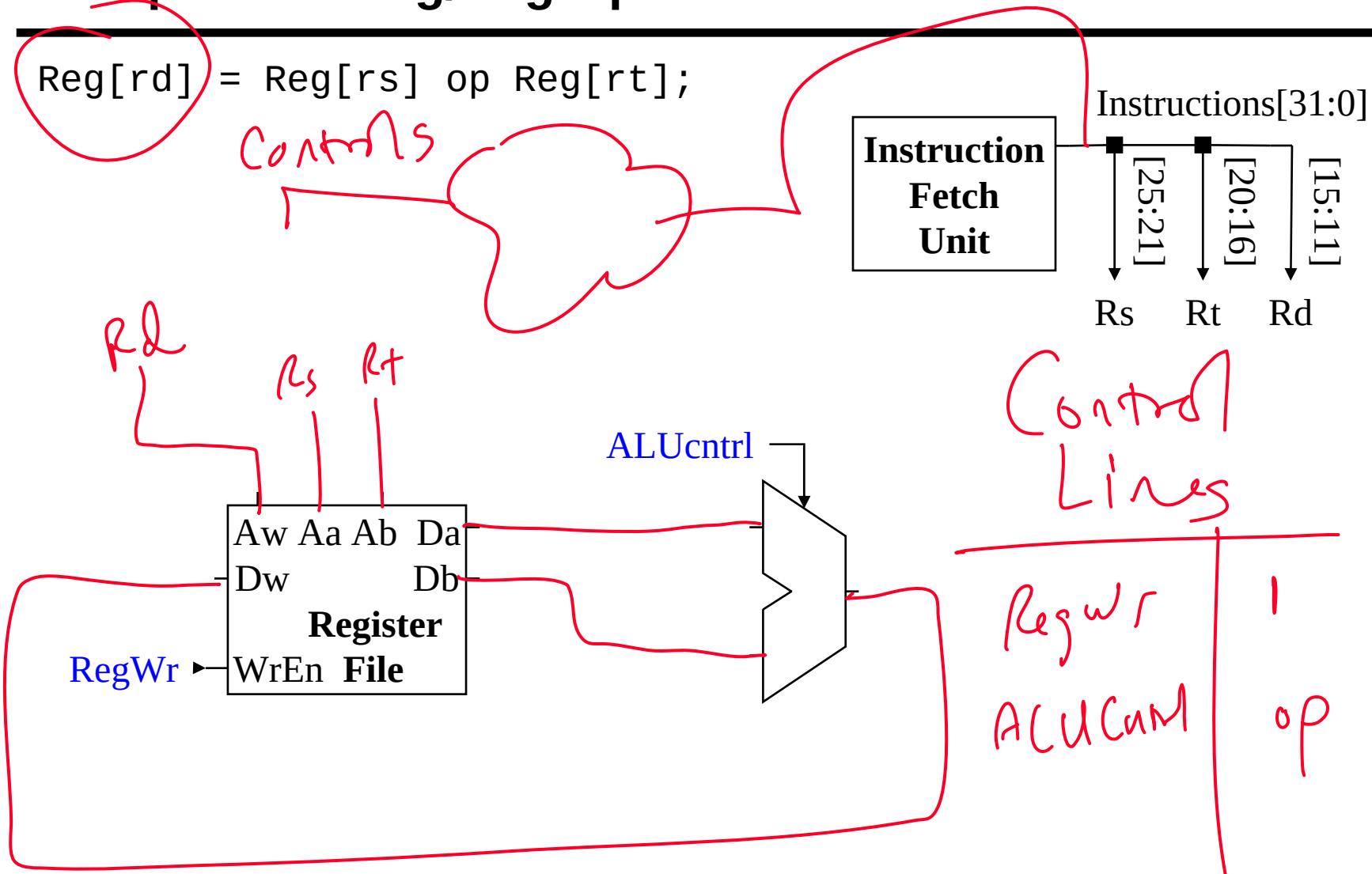

Add Immediate RTL

Add immediate instruction: `addi rt, rs, imm`

```
Instruction = Mem[PC];
Reg[rt] = Reg[rs] + SignExtend(imm);
PC = PC + 4;
```

IFetch

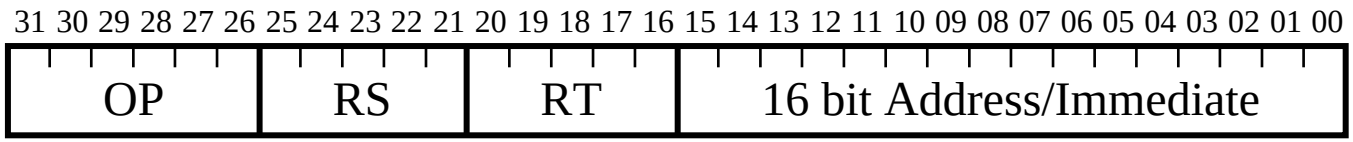

Datapath + Immediate Ops

```
Reg[rt] = Reg[rs] + SignExtend(imm);
```